Impact-E 300

Features

The Impact-E 300 is a compact, low power embedded system, utilising Intel® 3rd Generation mobile iCore™ processing technology

Key features:-

- Low power consumption
- High end processing power
- Compact custom design
- 3 slot expansion system

Dimensions

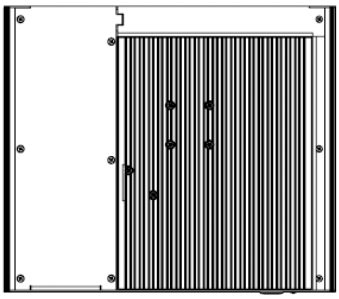

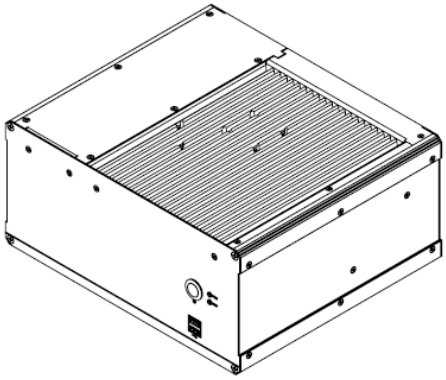

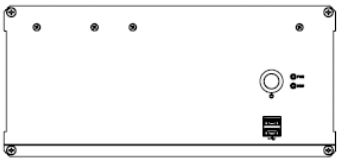

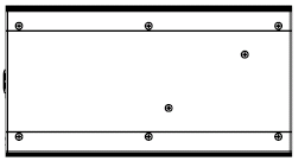

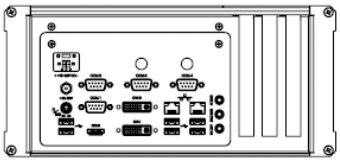

Tél: 04 37 28 30 34 Fax: 04 37 28 30 39 Email: ventes@ampliconfrance.com

Impact-E 300

The information is believed to be accurate. However Amplicon Liveline Limited accepts no responsibility for any problems caused by errors and omissions. Specifications are subject to change without notice.

Specifications

Hardware specifications	CPU: Intel® iCore™ i5-3610ME Main memory: 2GB SODIMM DDR3 1333MHz (max: 16GB 1600MHz) Chipset: Intel® QM77 PCH LAN: Dual integrated 10/100/1000 network connection
BIOS	AMI BIOS
Storage	Total drive capacity:- 2 x 2.5" SATA SSD/HDD
System expansion	1 x PCIe x16 rev 3.0 2 x PCIe x1 rev 2.0 1 x mPCIe half length (PCIe and USB signal)
System architecture	Mini ITX form factor motherboard
Supported O/S	Windows XP, Windows 7, Windows 8 (32 bit/64 bit) Microsoft Server: Server 2008 R2, Server 2012
General Interfaces	4 x USB 3.0 ports, 4 x USB 2.0 2 x RJ45 LAN 1 x DVI-I, 1 x DVI-D, 1 x HDMI (1920 x 1200) 1 x PS/2 (keyboard and Mouse) 4 x DB9 COM ports (2 x RS232/422/485, 2 x RS232) 1 x Line-In/Surround, 1 x Line Out, 1 x MIC In/Center + Subwoofer
Display	Max resolution: 1920 x 1200 (per port)
LED and switches	Power (PC on LED) Hard disk access LED ATX system control switch
Main board power options	Supports DC input voltage +12~25VDC

Mechanical	Design: Rugged compact embedded design Cooling: Fanless design Contruction: Extruded Aluminimum Colour: Black/Silver Dimension: 290 x 132 x 250 mm (W x H x D) Weight: 3.6Kg
Environmental operation	Accoustic noise: Near silent operation Operating Temperature: 0°C to 55°C Humidity: 0 to 90% non-condensing
Environmental storage	Temperature: -20°C to 70°C Humidity : 5% to 90% @ 20°C
Electromagnetic compatibility (EMC)	EN 55022 Class A EN 55024 Electrostatic discharge immunity test (EN61000-4-2) Enclosure port ±4kV Contact, applied to enclosure port ±8kV Air, applied to enclosure port Radiated, radio-frequency, electromagnetic field immunity test (EN61000-4-3) Enclosure port 80-1000MHz, 10 V/m (RMS, no modulation) 80% Modulation with 1kHz Sine wave Electrical fast transient/burst immunity test (EN61000-4-4) Power port AC,inc. protective earth Severity ±0.5kV Immunity to conducted disturbances induced by radio frequency fields (EN61000-4-6) Power port AC,inc. protective earth via CDN M3 0.15-80MHz, 10 V/m (no modulation) 80% Modulation with 1kHz Sine wave, applied via CDN Amplicon own a fully equipped EMC facility and can provide many additional tests to meet your requirements.
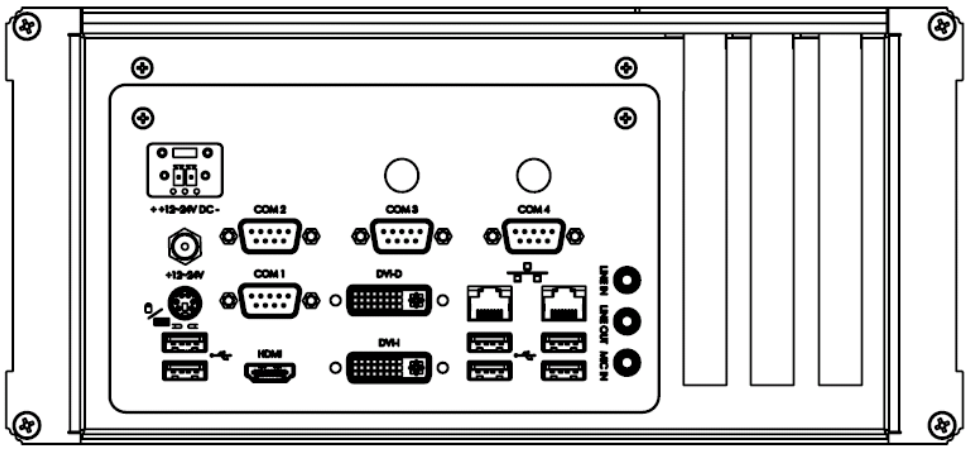
Rear I/O plate